Roll No. | | | | | | | |

Mid Semester Examination 2025

Name of the Course: B. Tech (ECE) Semester: IV

Name of the Paper: Analog Integrated Circuits Paper Code: **TEC 402**

Time: 90 minutes Maximum Marks: 50

Note:-

(i) Answer all the question by choosing any one of sub questions.

(ii) Each question carries 10 marks

Q1	(10marks)	CO1
(a)	**Discuss the significance of Current Mirror circuit in a differential amplifier with a detailed circuit description.**	
	OR	
(b)	**The following specifications are given for the DIBO Amplifier R_C = 3.2kΩ, R_E= 6.7 kΩ, R_{in1} = R_{in2} = 80 Ω, $+V_{cc}$ = 15V, $-V_{EE}$ = -15 V, ß=200, and V_{BE}= 0.715v. Determine the ICQ, VCEQ, Voltage gain, input resistance and output resistance.** 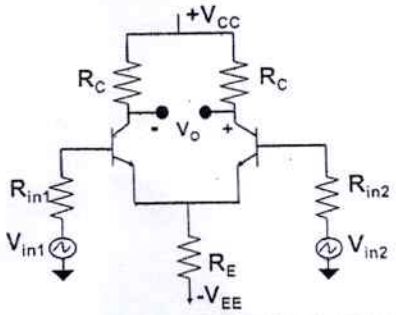	
Q2	(10 marks)	CO1
(a)	**Discuss the significance of Level Shifter in a differential amplifier with a detailed circuit description.**	
	OR	
(b)	**Perform DC and AC analysis of single input balanced output differential amplifier with proper diagram.**	
Q3	(10 marks)	CO2
(a)	**Explain the classifications of differential amplifier on the basis of input and output signals.**	
	OR	
(b)	**The 741C Op-Amp having the following parameters is connected as a non-inverting amplifier with R_1 = 1 kΩ, R_f = 20 kΩ, A=100,000, R_i = 1 MΩ, R_o = 75 Ω, f_o = 5 Hz, supply voltage = ± 10 V. Compute the values of A_f, R_{if}, R_{of}, and f_F. Compute the same parameters while converting this circuit into Voltage Follower.**	

	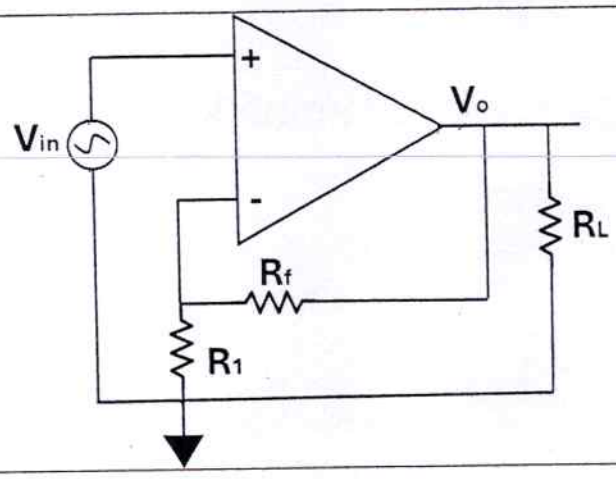	
Q4	(10 marks)	CO2
(a)	Derive the expression for voltage gain, input resistance, and output resistance for negative feedback non-inverting Op-Amp.	
	OR	
(b)	Explain the Scaling Amplifier in detail using inverting and non-inverting Op-Amp.	
Q5	(10 marks)	CO1 and CO3
(a)	Explain the bandwidth, gain bandwidth product, unity feedback gain of closed loop Amplifier. Also find the expression for f_F in non-inverting amplifier.	
	OR	
(b)	Explain in brief about cascaded Differential Amplifier Stages.	